REV	SHEET	ZONE	REVISION NOTE CAD MAINTAINED. CHANGES SHALL BE INCORPORATED BY THE DESIGN ACTIVITY.	ECO	DATE APPR
B			CHANGED INPUT FEED LINES TO SWIVEL & FLIPPED BAYS 1 & 2	9793	4/23/15

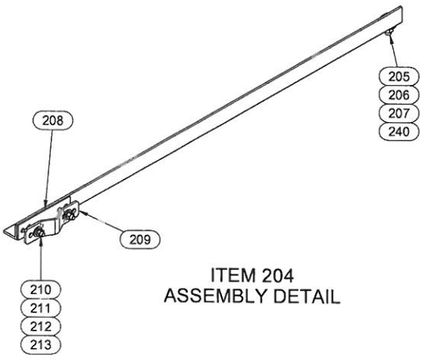

ITEM 204
ASSEMBLY DETAIL

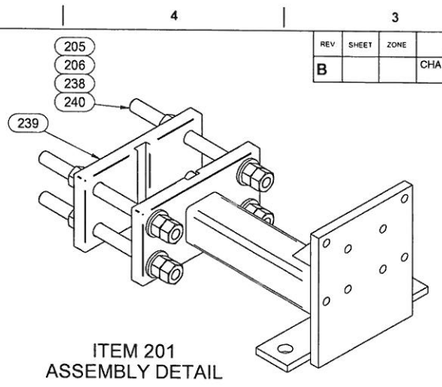

ITEM 201
ASSEMBLY DETAIL

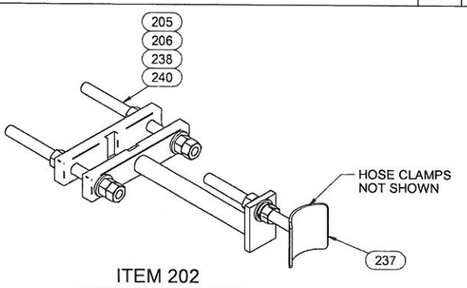

ITEM 202
ASSEMBLY DETAIL

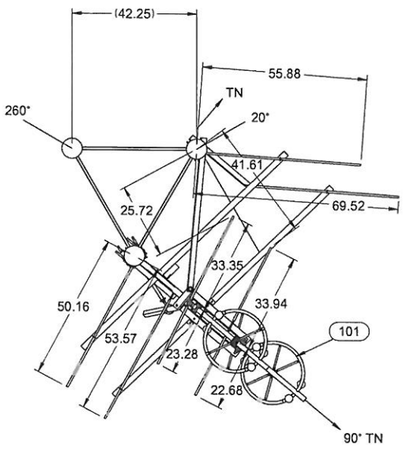

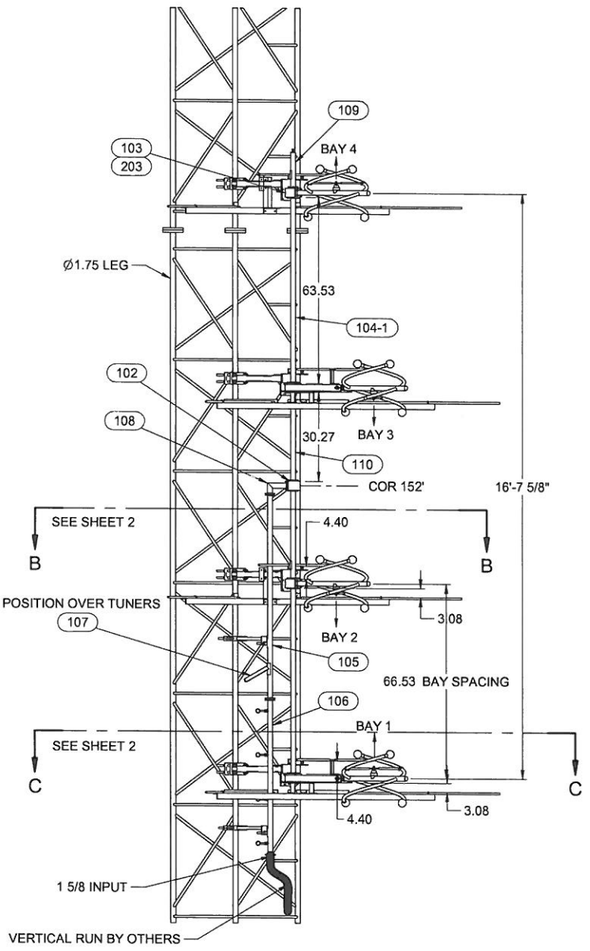

ANTENNA BOM				
ITEM #	QTY	PART #	MATERIAL DECRIPTION	UNIT OF MEASURE
101	4	R66905	DCRH PLAIN BAY	EACH
102	3	R68428	JCT BLK CENTER ASSY DCRH & SKM ANT	EACH
103	2	R68429	JCT BLK END ASSY DCRH & SKM ANT	EACH
104-1	2	RTL2FMSQFLG	T/L KIT 1-50 SQ FLANGE FM USE 63.53" LONG	EACH
104-2	2	RTL2FMSQFLG	T/L KIT 1-50 SQ FLANGE FM USE 16.60" LONG	EACH
105	1	R80174	F/L 1-50 x 70 DCRH/SKM INPUT SECT	EACH
106	1	R75886	AFM FM 1-50 x 53" LONG	EACH
107	1	R0046348501	ICE SHIELD KIT 1 5/8 F/L	EACH
108	1	R71149	ELBOW 1-50 3x6 SQ FLG'S FM USE	EACH
109	1	R103326	EXTENSION TOP BLOCK 1-50 T/L	EACH
110	2	RTL2FMSWIVL	T/L KIT 1-50 SWIVEL FLANGE FM USE 30.27" LONG	EACH
MOUNTS & PARASITICS BOM				
201	4	300002474	MOUNT, LEG, FM ANTENNA BAY	EACH
202	2	300002488	MOUNT, TERMINATION	EACH
203	4	11000005999	HARDWARE BLOCK MOUNTING KIT	EACH
204	4	300002477	ANTI-ROTATION STRUT	EACH
205	20	R0426300000	WASHER FLAT 5/8 SAE STD SS	EACH
206	20	R0166300000	WASHER LOCK SPLIT 5/8 SS	EACH
207	4	R0026311200	HHCS SS 5/8-11 x 2.00	EACH
208	4	R002A80601	ANTI-ROTATION REINFORCEMENT PLATE	EACH
209	8	R84381	CLAMPING BAR	EACH
210	16	R0025013300	HHCS SS 1/2-13 x 3.00	EACH
211	16	R0425000000	WASHER FLAT 1/2 SAE STD	EACH
212	16	R0165000000	WASHER LOCK SPLIT 1/2 SS	EACH
213	16	R0145013000	NUT HEX 1/2-13 MOLY LUBED	EACH
214	2	3000002475	MOUNT EXTENSION, ANTENNA BAY	EACH
215	2	3000002476	MOUNT EXTENSION, ANTENNA BAY	EACH
216	8	R0023816175	HHCS SS 3/8-16 x 1.75	EACH
217	12	R0023816125	HHCS SS 3/8-16 x 1.25	EACH
218	4	R0023816325	HHCS SS 3/8-16 x 3.25	EACH
219	24	R0423800000	WASHER FLAT 3/8 SAE STD	EACH
220	24	R0163800000	WASKER LOCK SPLIT 3/8 SS	EACH
221	24	R0143816000	NUT HEX 3/8-16 MOLY LUBED	EACH
222	8	R0043605001	U-BOLT 1/4-20 .38R 1.13 LEG	EACH
223	16	R0422500000	WASHER FLAT 1/4 SAE STD	EACH
224	16	R0162500000	WASHER LOCK SPLIT 1/4 SS	EACH
225	16	R0142520000	NUT HEX 1/4-20	EACH
226	2	300002486	MOUNT BRACKET	EACH
227	2	300002484	PARASTIC SUPPORT	EACH
228	2	300002480	PARASITIC HORIZONTAL	EACH
229	2	300002481	PARASITIC HORIZONTAL	EACH
230	2	300002482	PARASITIC HORIZONTAL	EACH
231	2	300002483	PARASITIC HORIZONTAL	EACH
232	2	300002479	PARASITIC HORIZONTAL	EACH
233	2	300002478	PARASITIC HORIZONTAL	EACH
234	16	R0002187009	HOSE CLAMP 1.56 - 2.50 DIA	EACH
235	4	R0163100000	WASHER LOCK 5/16 SS	EACH
236	4	R0023118100	HHCS 5/16-18 x 1.00 LONG	EACH
237	6	R103295	SADDLE KIT 1 5/8 T/L 5/8-11 x 7.00 LONG	EACH
238	20	11000006193	THREADED ROD SS 5/8-11 x 12.00 LONG	EACH
239	4	R004A27502	CLAMP FM STD MOUNT GALV	EACH
240	64	R0146311000	NUT HEX 5/8-11 MOLY LUBED	EACH
241	2	300002487	PARASITIC SUPPORT	EACH
242	2	300002485	MOUNT BRACKET	EACH

INSTALLATION NOTES:

1. ANTENNA SHALL BE INSTALLED PER THIS INSTALLATION DRAWING. ANY DEVIATIONS WILL VOID WARRANTY UNLESS APPROVED BY DIELECTRIC.
2. TO ACHIEVE ANY GIVEN PATTERN STUDY PERFORMED BY DIELECTRIC, THE PROVIDED ANTENNA MUST BE INSTALLED AND ORIENTED AS DEPICTED IN THIS DRAWING. IF ANY SUCH PATTERN WAS NOT PROVIDED, THE ANTENNA ORIENTATION AND POSITION IS AT THE DISCRETION OF THE BUYER TO WHICH THE ANTENNA WAS SOLD. SHOULD ANY QUESTIONS ARISE DURING THE INSTALLATION PROCESS, CONTACT DIELECTRIC AT, 1-800-341-9678, TO ASSIST IN THIS PROCESS; BE PREPARED TO PROVIDE THE PART NUMBER OR DRAWING NUMBER SHOWN BELOW.
3. COMPONENTS ARE MATCH MARKED FOR EASE IN ASSEMBLY.
4. ITEM NUMBERS DEPICTED ON THIS DRAWING CORRESPOND TO ITEM NUMBERS LISTED ON ENCLOSED BILL OF MATERIAL.
5. APPLY THIN LAYER OF DC4 DOW CORNING COMPOUND TO ALL "O"-RING SEALS PRIOR TO ASSEMBLY.
6. UNLESS OTHERWISE SPECIFIED, THE TOP BAY MUST NOT BE LOCATED ANY CLOSER THAN 5 ft. BELOW THE TOWER TOP.
7. BAY TAP POINT DIRECTION INDICATED BY ARROWS LOCATED IN THE BAY IN ELEVATION VIEW.
8. THE VARIABLE TRANSFORMER IS SHIPPED WITH ALL PROBES FULLY INSERTED. AT INSTALLATION, BE CERTAIN TO LOOSEN LOCKNUTS AND PULL ALL PROBES TO FULL OUTWARD POSITION. ALL PROBES MUST BE IN FULL OUTWARD POSITION BEFORE POWERING UP ANTENNA. REFER TO INSTRUCTION MANUAL FOR TUNING INSTRUCTIONS.
9. SUGGESTED LOCATION FOR TERMINATION MOUNT. LOCATION MAY VARY PER TOWER DESIGN.
10. FOR HEATED ANTENNAS ONLY: HEATER HARNESS TO BE DRESSED AND SECURED TO TOWER PER INSTALLERS DISCRETION. LOOSE OR DANGLING WIRE IN RF FIELD WILL SHORT AND RESULT IN ANTENNA FAILURE.
11. REFER TO DRAWING A88212 FOR ALL HARDWARE TORQUE SPECIFICATIONS.
    * FOR FIBERGLASS APPLICATIONS, TORQUE MOUNTING HARDWARE TO 180 in-lbs (15 ft-lbs)
12. IT IS IMPORTANT TO MAINTAIN DOCUMENT FOR HISTORICAL PURPOSES. THE MOST CRITICAL PORTION OF INFORMATION TO BE MAINTAINED IS THE PART NUMBER AS SPECIFIED.
13. AFTER ANTENNA HAS BEEN INSTALLED AND TUNED ON THE TOWER, IT IS REQUESTED THAT A COPY OF THE TEST DATA BE FORWARDED TO:

    DIELECTRIC
    C/O FM ENGINEERING MANAGER
    22 TOWER RD. RAYMOND, ME. O4O71
    PHONE 1 – 800 – 341 - 9678

STATUS: RELEASED
PART NUMBER/DRAWING NO: 300001911 ANT 300001912 MNT
SAP DOCUMENT NO
MATERIAL
FINISH: N/A
REFER TO D8110 FOR PLATING
REFER TO D17800 FOR PAINT

DIMENSIONAL TOLERANCES (UNLESS OTHERWISE NOTED)
DECIMAL DIMENSIONS
3 PLACE DIMENSIONS ± 005
2 PLACE DIMENSIONS ± 02
FRACTIONAL DIMENSIONS
0"-6" ±1/32"
ABOVE 6" UP TO 12" ±1/16"
ABOVE 12" UP TO 48" ±1/8"
ABOVE 48" ±1/4"
ANGULAR DIMENSIONS ±1/2°
REFERENCE DIMENSIONS ARE NOT FOR MANUFACTURING OR INSPECTION
ANGLE PROJECTION

	NAME	DATE
DESIGNED BY	mdavison	4/23/2015
DETAIL BY	mdavison	4/23/2015
CHKD BY	rmason	4/2/1/15
ENG. 1 APPR.	smart	4/2/1/15
ENG. 2 APPR.	-	-
MANUFACT.	mayhan	4/22/15

Dielectric Raymond, ME

TITLE: INSTALLATION
DCRHC50D WMVY 88.7 FM
SO 41534

GAGE CODE: 08441
DRAWING NO: 017A40400
SIZE: D
2:40:36 PM
SHEET: 1 OF 2

COMPANY CONFIDENTIAL. INFORMATION CONTAINED HEREIN IS CONFIDENTIAL. IT IS THE PROPERTY OF DIELECTRIC. IT IS TO BE USED SOLELY FOR THE PURPOSE PROVIDED, AND IT IS NOT TO BE DISCLOSED TO OTHERS WITHOUT THE PRIOR WRITTEN CONSENT OF DIELECTRIC.

UNLESS OTHERWISE SPECIFIED
MANUFACTURING TOLERANCE AND PROCEDURES MUST BE IN ACCORDANCE WITH D7B651. ALL ALUMINUM, COPPER, AND BRASS WELDING MUST COMPLY WITH A-62700, SECT. XI "PRODUCTION WELDING PROCEDURES". STRUCTURAL STEEL WELDING MUST COMPLY WITH "AWS 1 1 CURRENT REVISION"

REV	SHEET	ZONE	REVISION NOTE CAD MAINTAINED. CHANGES SHALL BE INCORPORATED BY THE DESIGN ACTIVITY.	ECO	DATE APPR
B			CHANGED INPUT FEED LINES TO SWIVEL & FLIPPED BAYS 1 & 2	9793	4/23/15

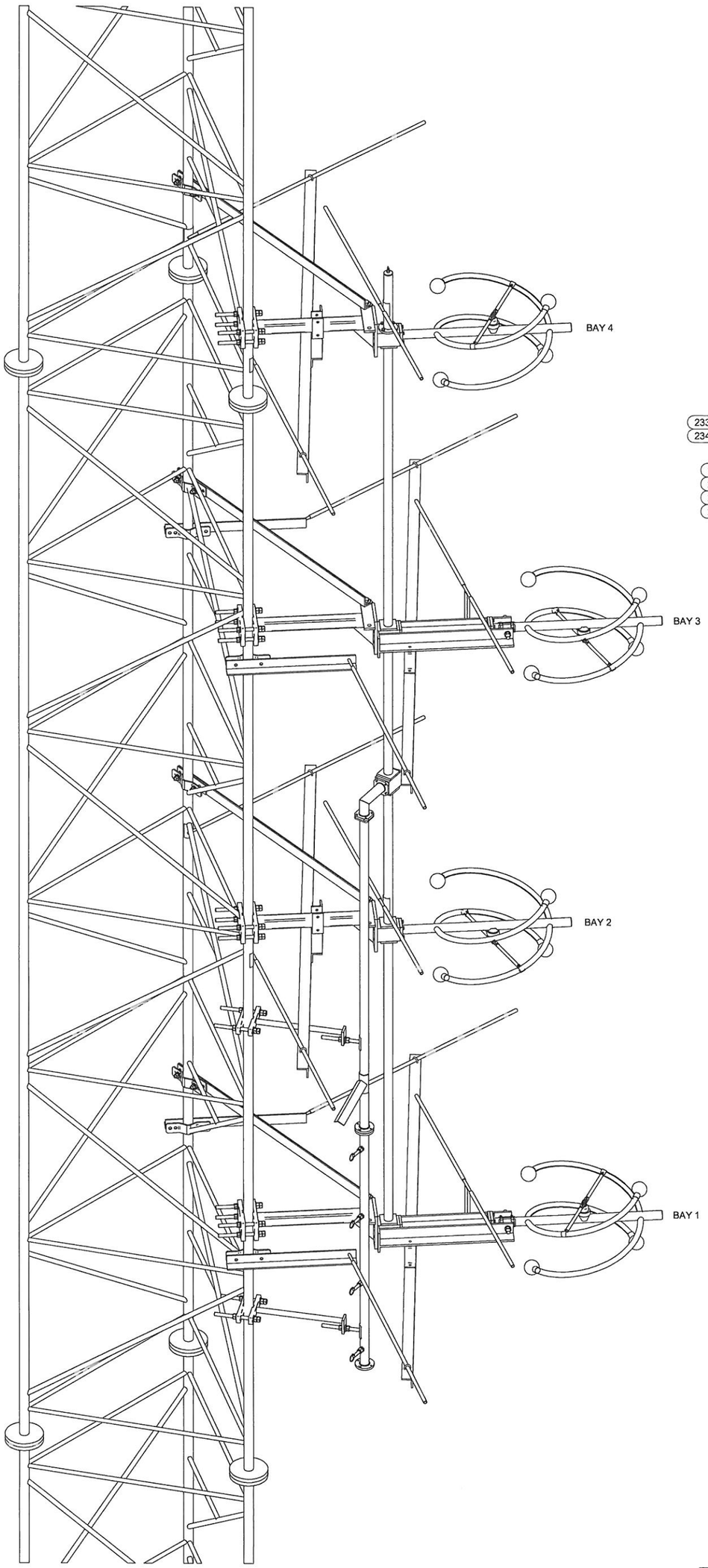

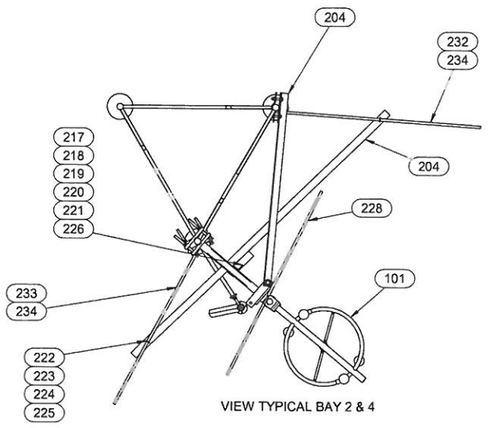

VIEW TYPICAL BAY 2 & 4

SECTION B-B

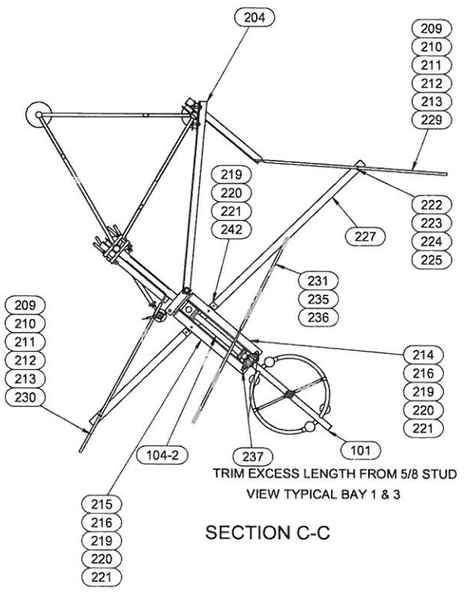

TRIM EXCESS LENGTH FROM 5/8 STUD
VIEW TYPICAL BAY 1 & 3

SECTION C-C

STATUS: RELEASED	DIMENSIONAL TOLERANCES (UNLESS OTHERWISE NOTED) DECIMAL DIMENSIONS 3 PLACE DIMENSIONS ± .005 2 PLACE DIMENSIONS ± .02 FRACTIONAL DIMENSIONS 0"-6" ±1/32" ABOVE 6" UP TO 12" ±1/16" ABOVE 12" UP TO 48" ±1/8" ABOVE 48" ±1/4" ANGULAR DIMENSIONS ±1/2° REFERENCE DIMENSIONS ARE NOT FOR MANUFACTURING OR INSPECTION ANGLE PROJECTION	Dielectric Raymond, ME	
PART NO / MATERIAL NO: 300001911 ANT 300001912 MNT		TITLE: INSTALLATION DCRHC50D WMVY 88.7 FM SO 41534	
SAP DOCUMENT NO			
MATERIAL			
FINISH: N/A	NAME / DATE: DESIGNED BY mdavison 4/23/2015; DETAIL BY mdavison 4/23/2015; CHKD. BY r mason 4/21/15; ENG. 1 APPR. r smart 4/21/15; ENG. 2 APPR. - ; MANUFACT. mavhan 4/22/15	SIZE D; CAGE CODE 08441; DRAWING NO 017A40400	
REFER TO D8110 FOR PLATING REFER TO D17800 FOR PAINT		2:46:36 PM	SHEET: 2 OF 2

COMPANY CONFIDENTIAL. INFORMATION CONTAINED HEREIN IS CONFIDENTIAL. IT IS THE PROPERTY OF DELECTRIC. IT IS TO BE USED SOLELY FOR THE PURPOSE PROVIDED AND IT IS NOT TO BE DISCLOSED TO OTHERS WITHOUT THE PRIOR WRITTEN CONSENT OF DELECTRIC

UNLESS OTHERWISE SPECIFIED

MANUFACTURING TOLERANCE AND PROCEDURES MUST BE IN ACCORDANCE WITH D78681. ALL ALUMINUM, COPPER AND BRASS WELDING MUST COMPLY WITH A-62700, SECT. XIV "PRODUCTION WELDING PROCEDURES". STRUCTURAL STEEL WELDING MUST COMPLY WITH "AWS 1 1 CURRENT REVISION".